ÄDELFORS

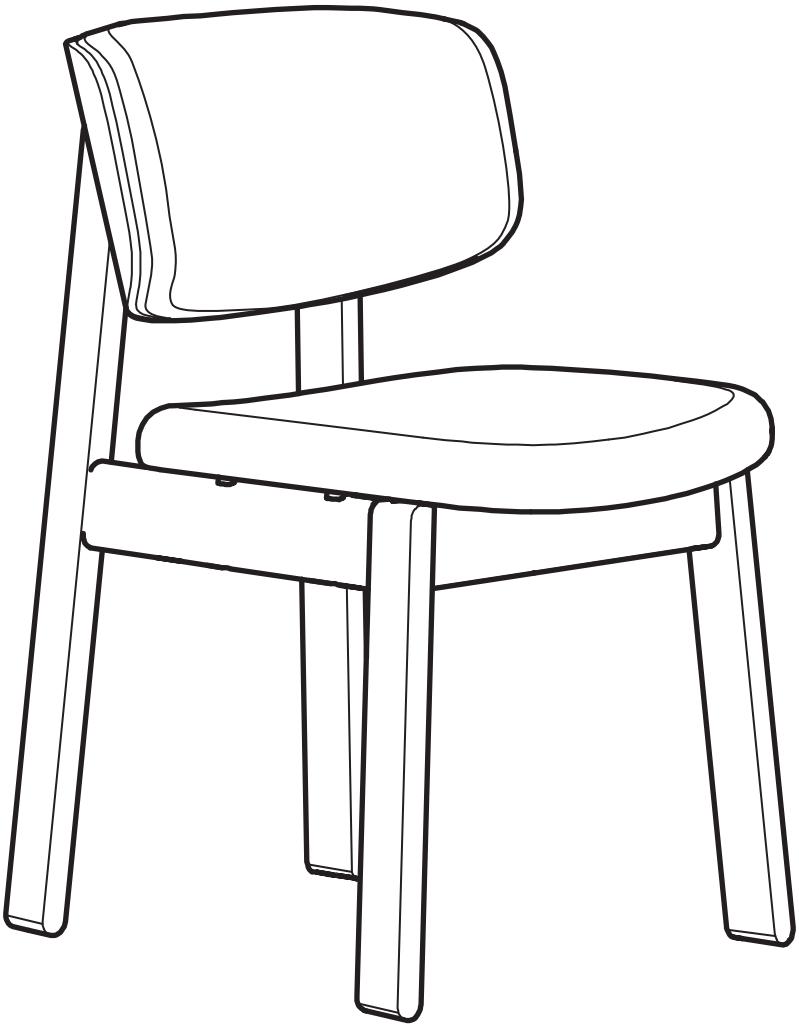

Design and Quality
IKEA of Sweden

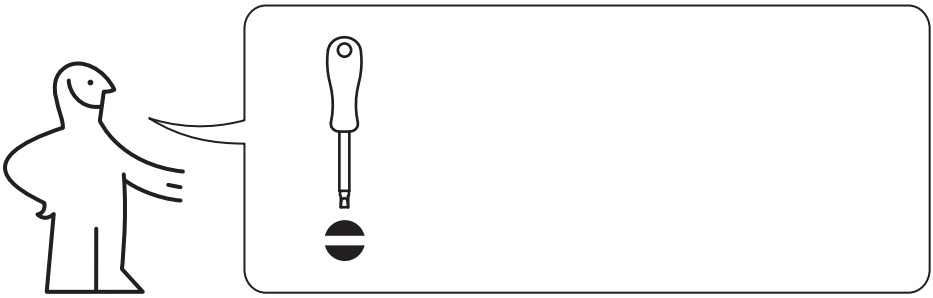

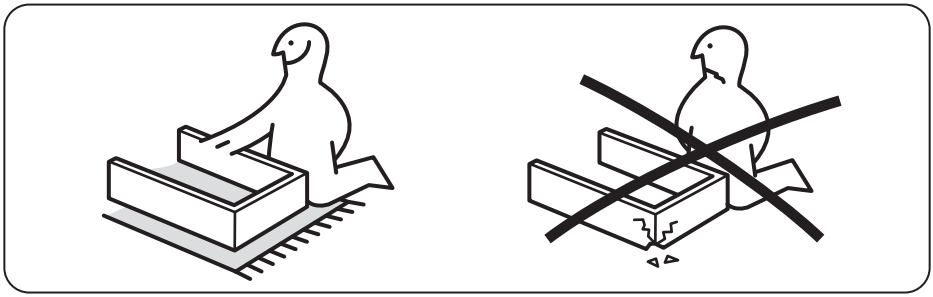

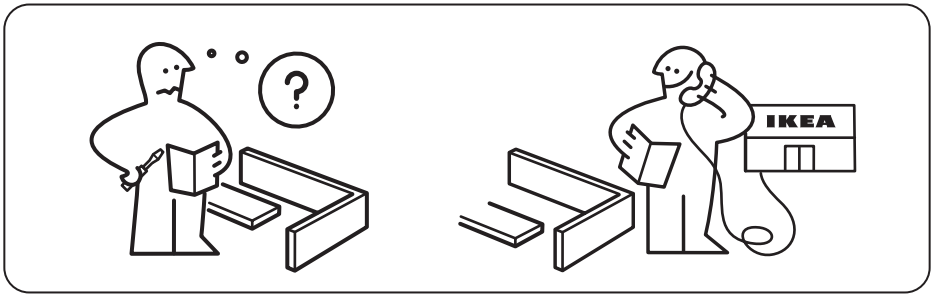
IKEA

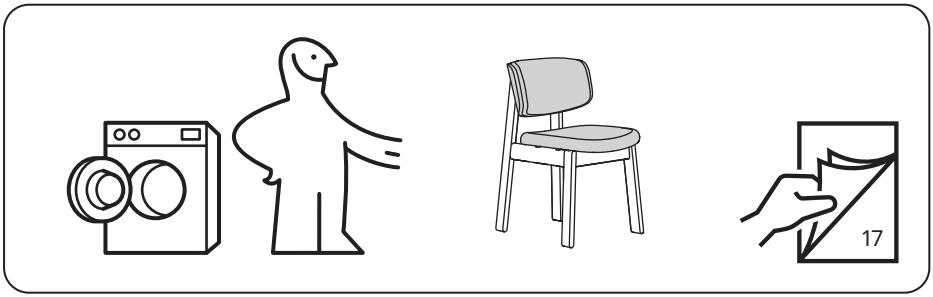
17



1x

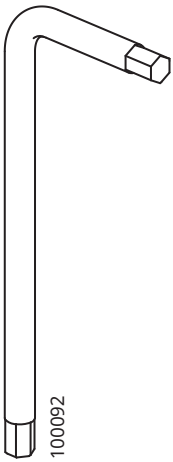

1x

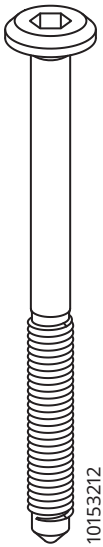

4x



4x

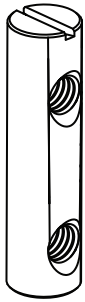

4x

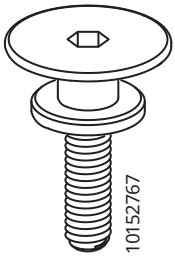

4x

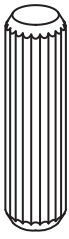

4x



4x



4x

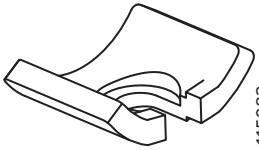

4x

1

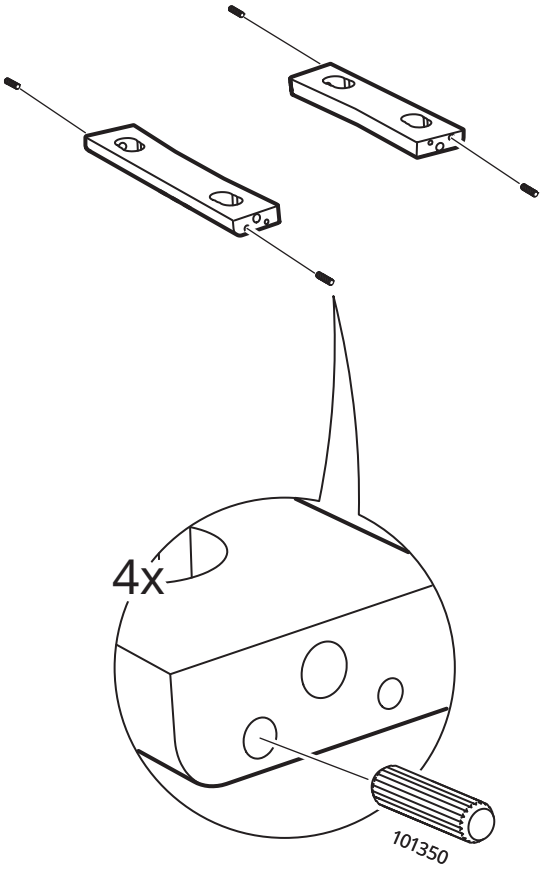

2

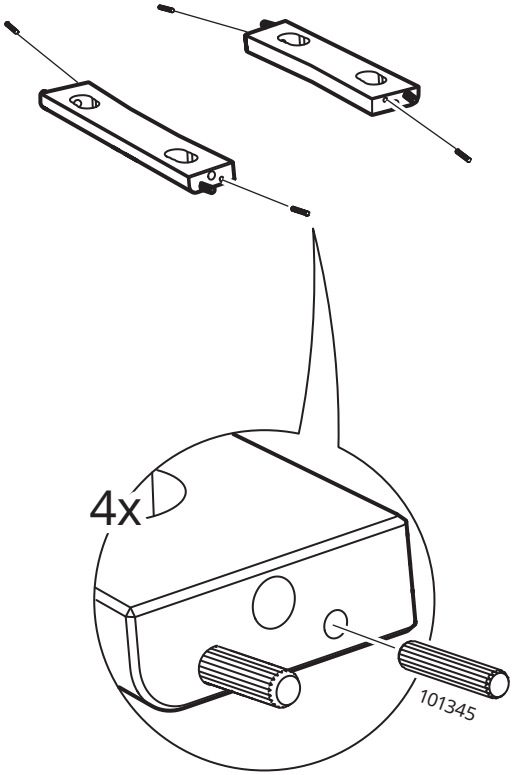

3

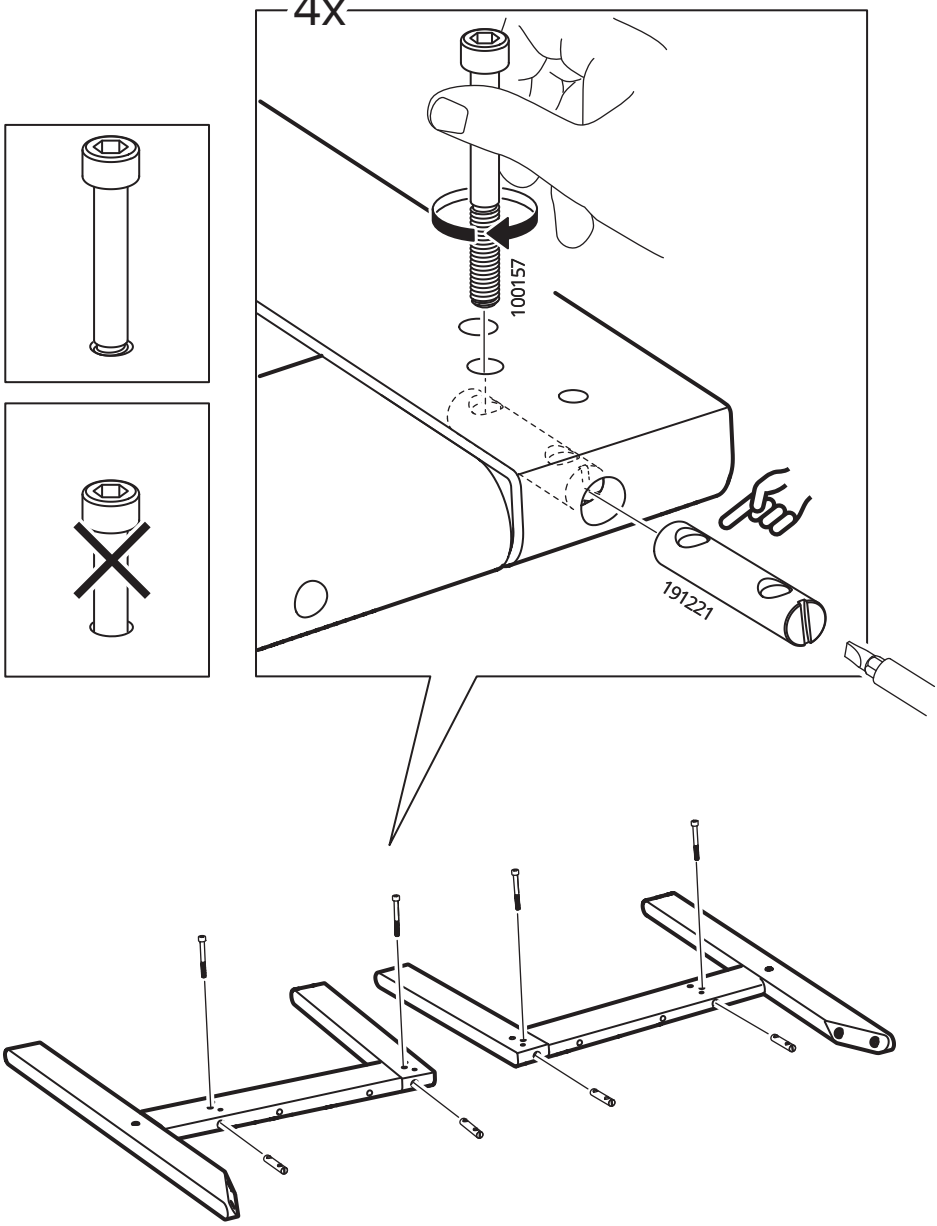

4

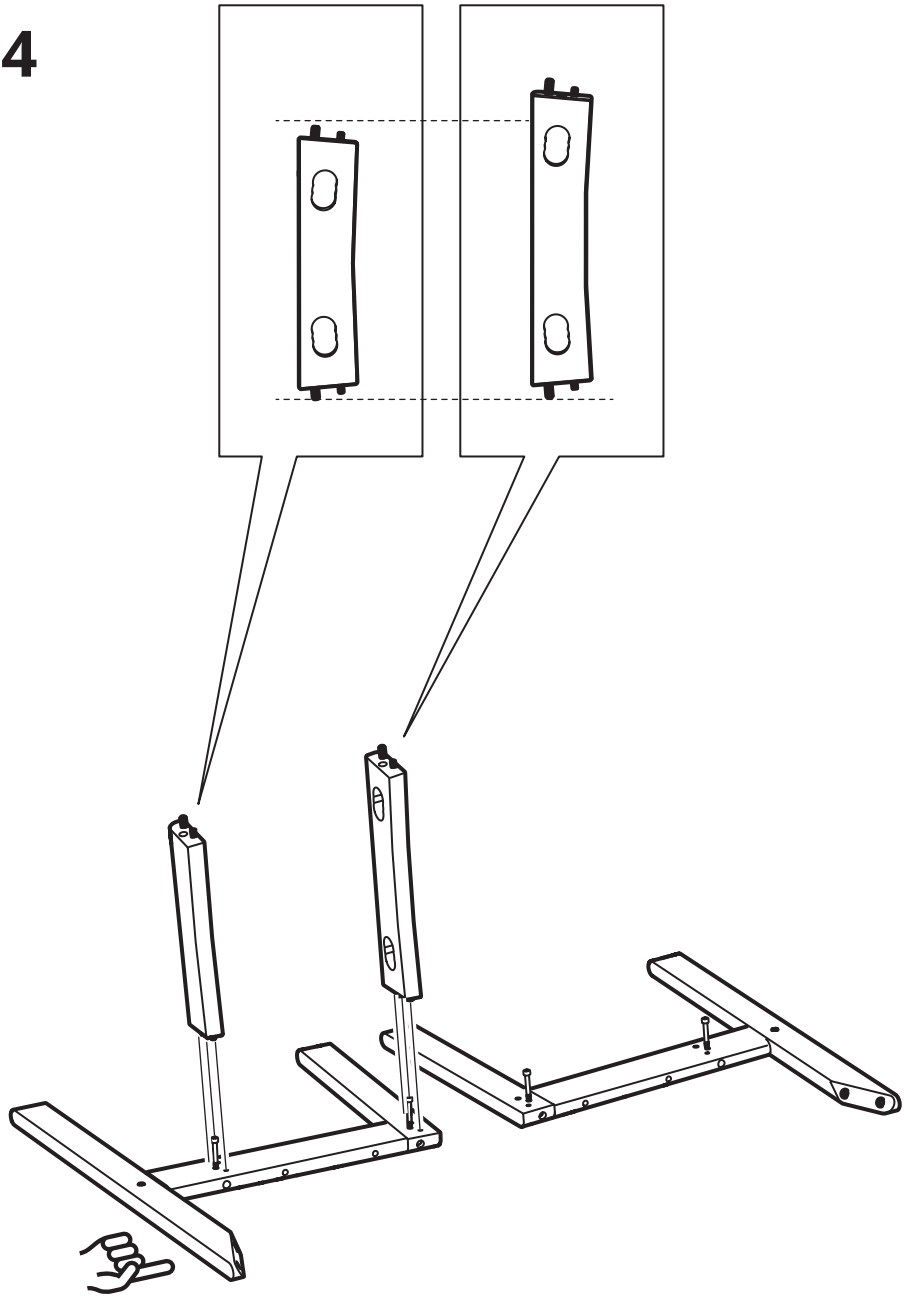

5

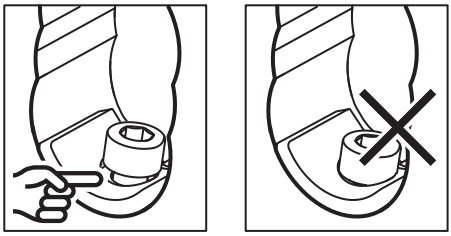

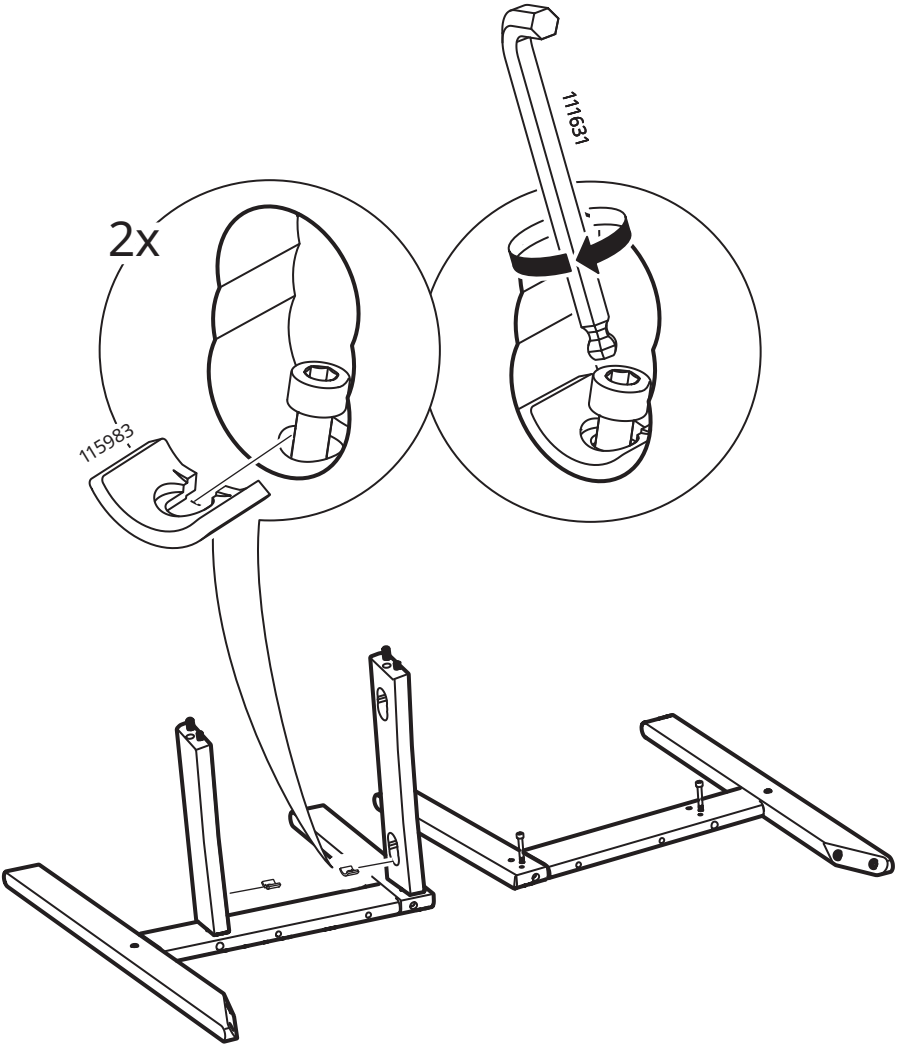

6

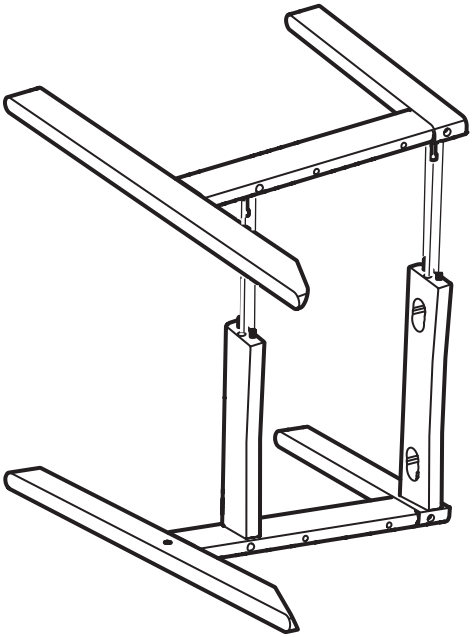

7

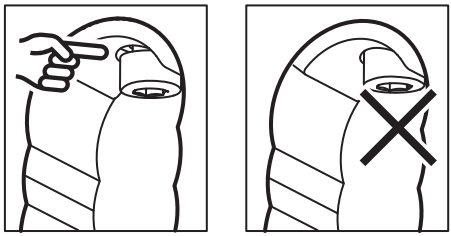

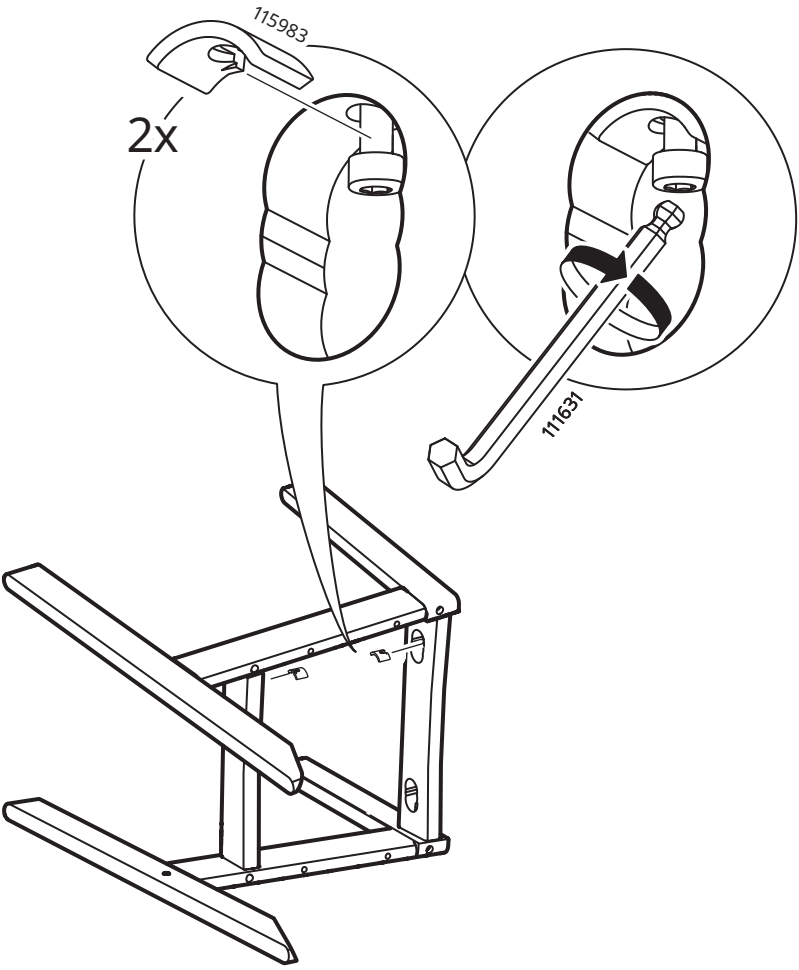

8

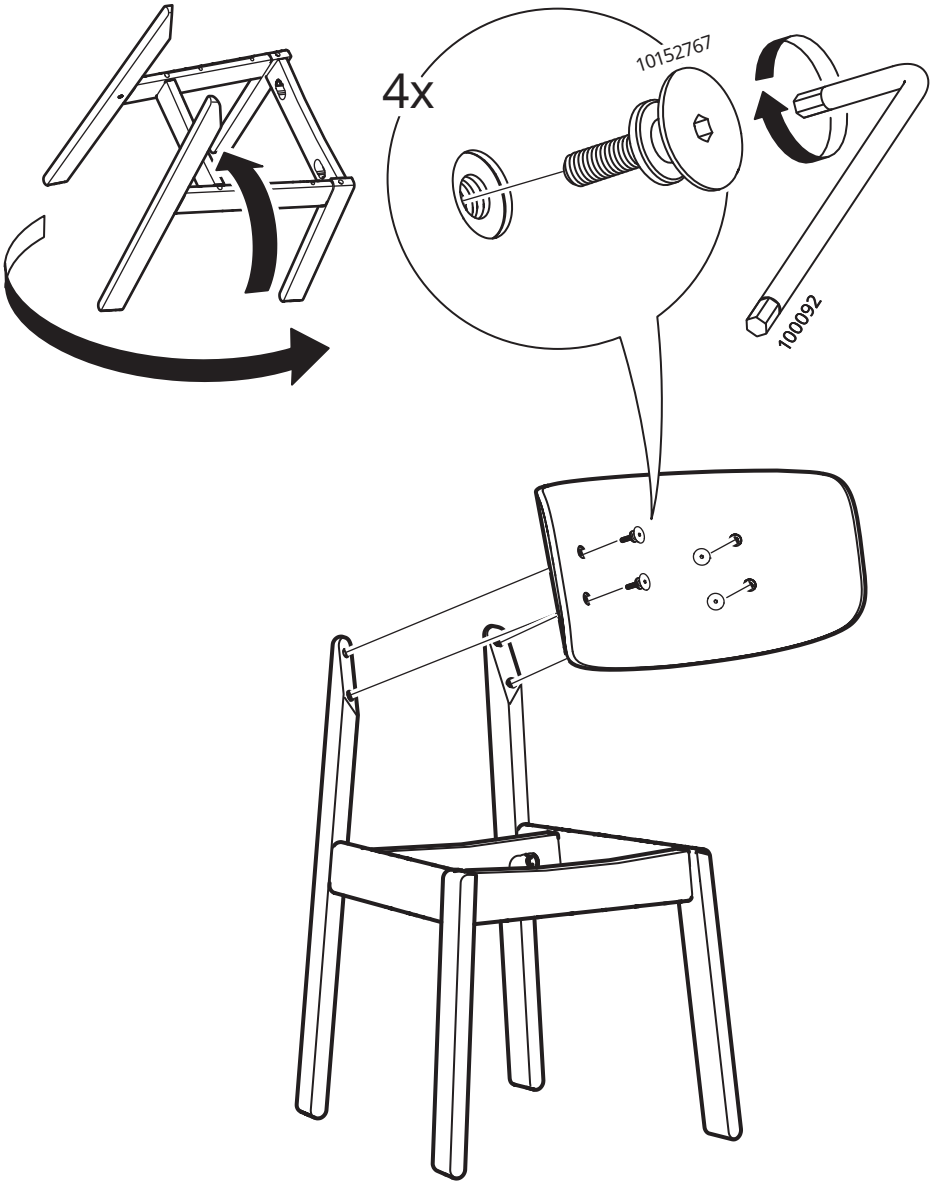

9

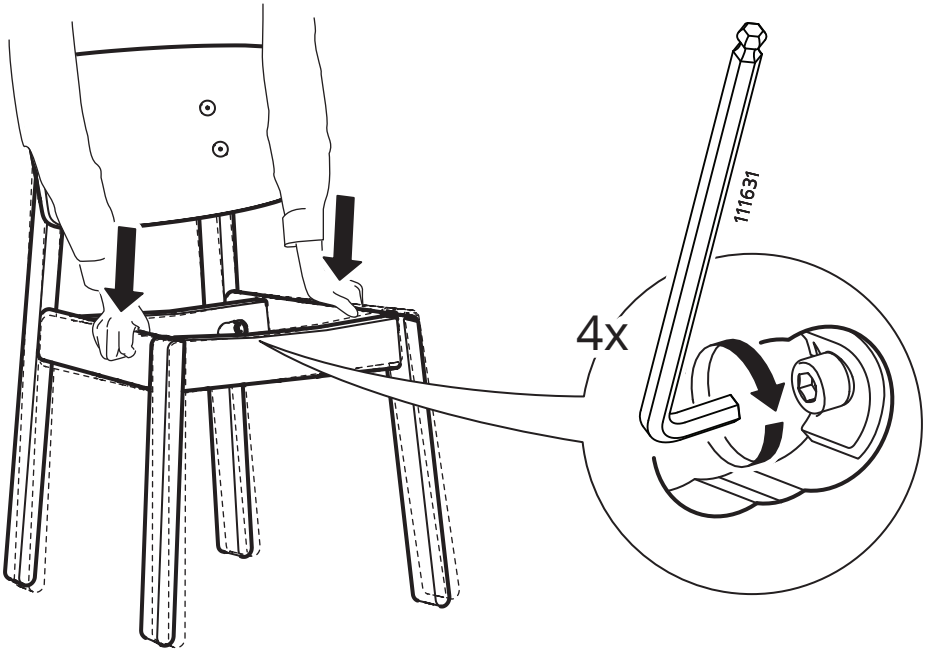

10

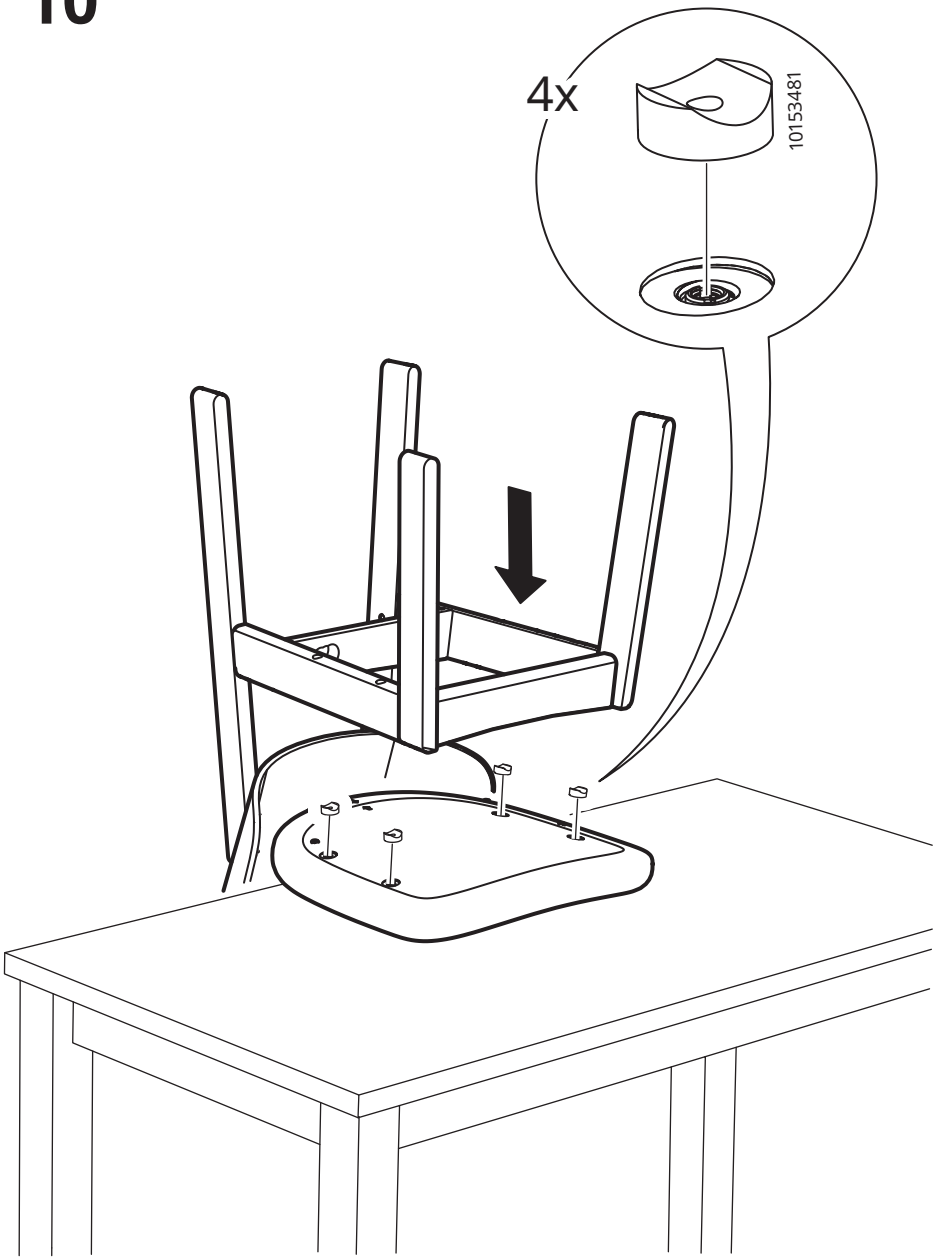

11

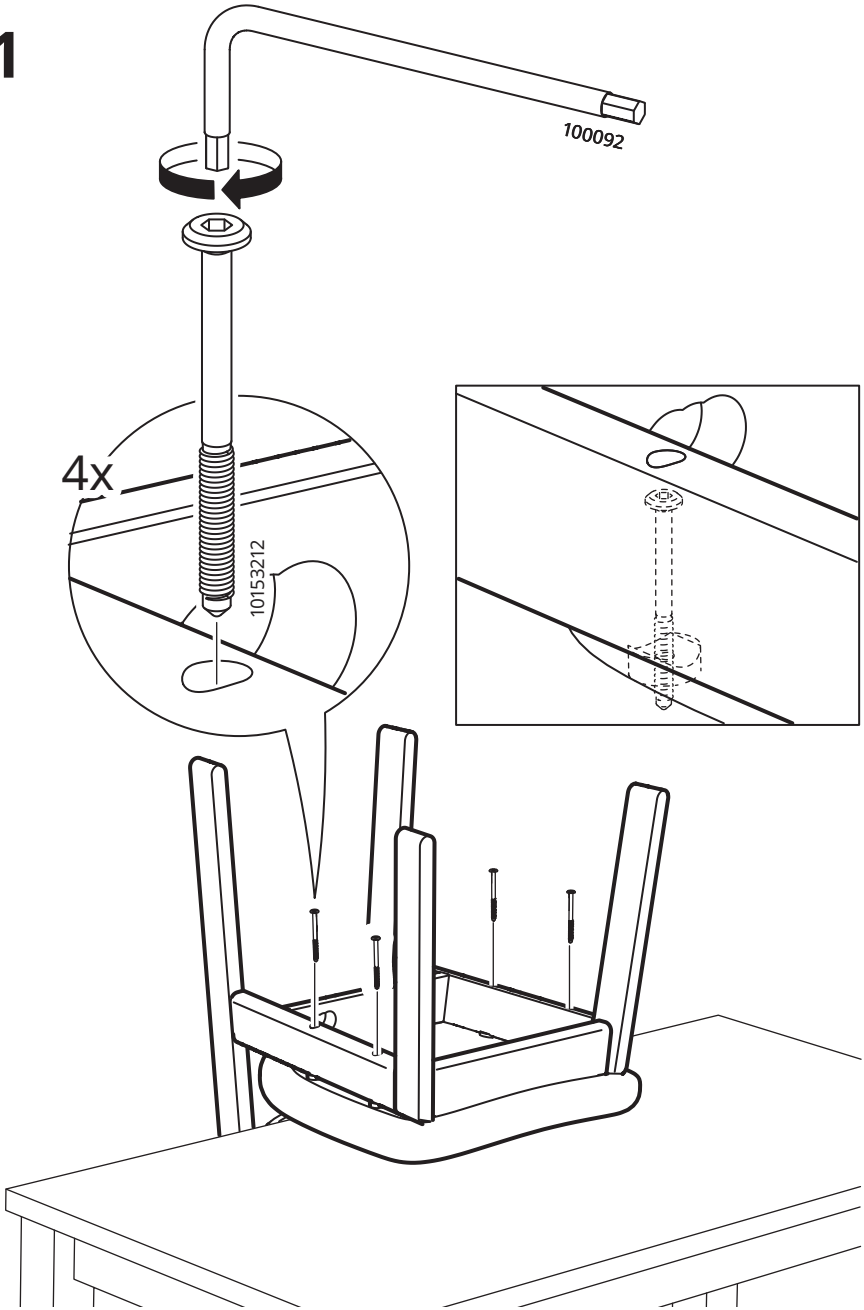

12

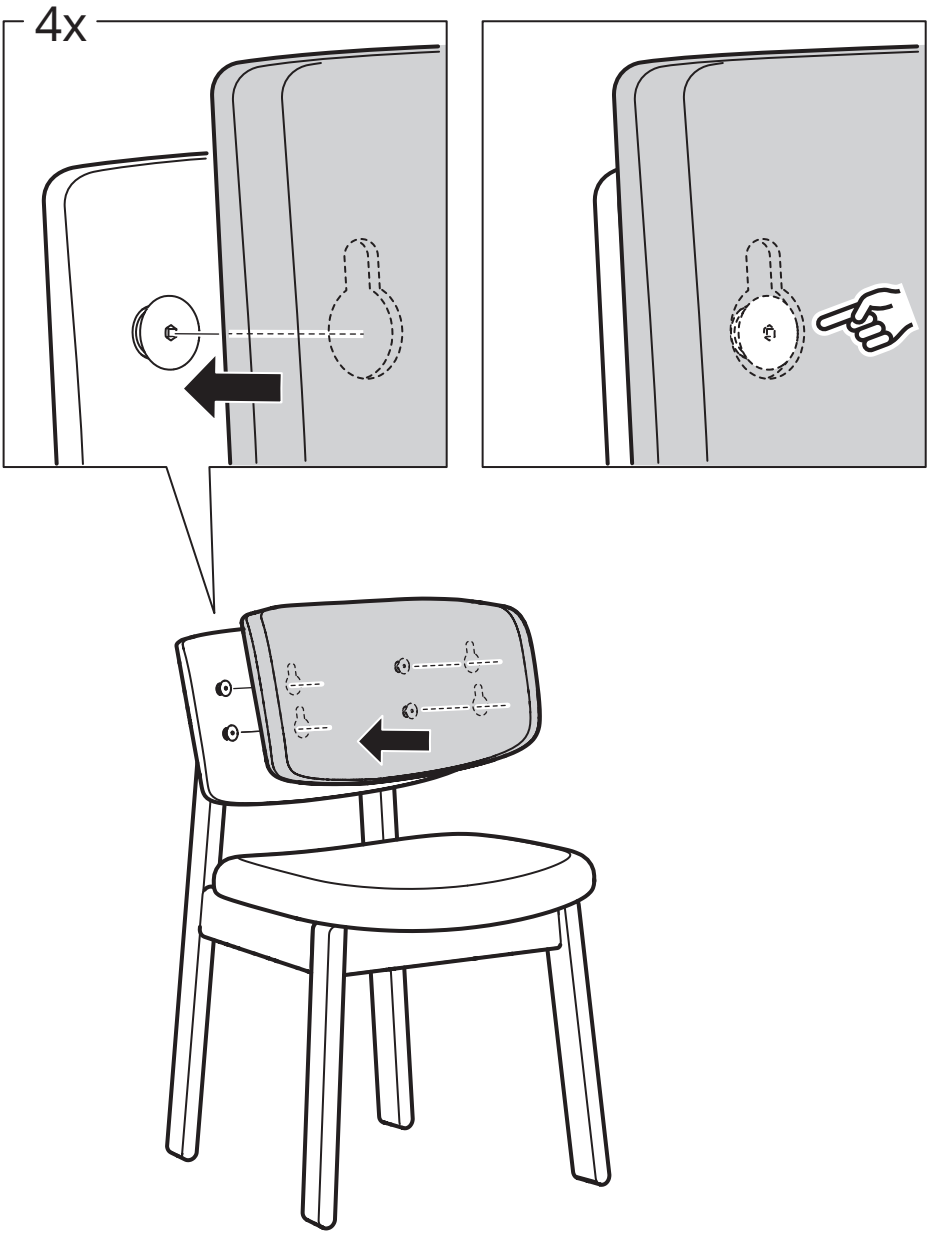

13

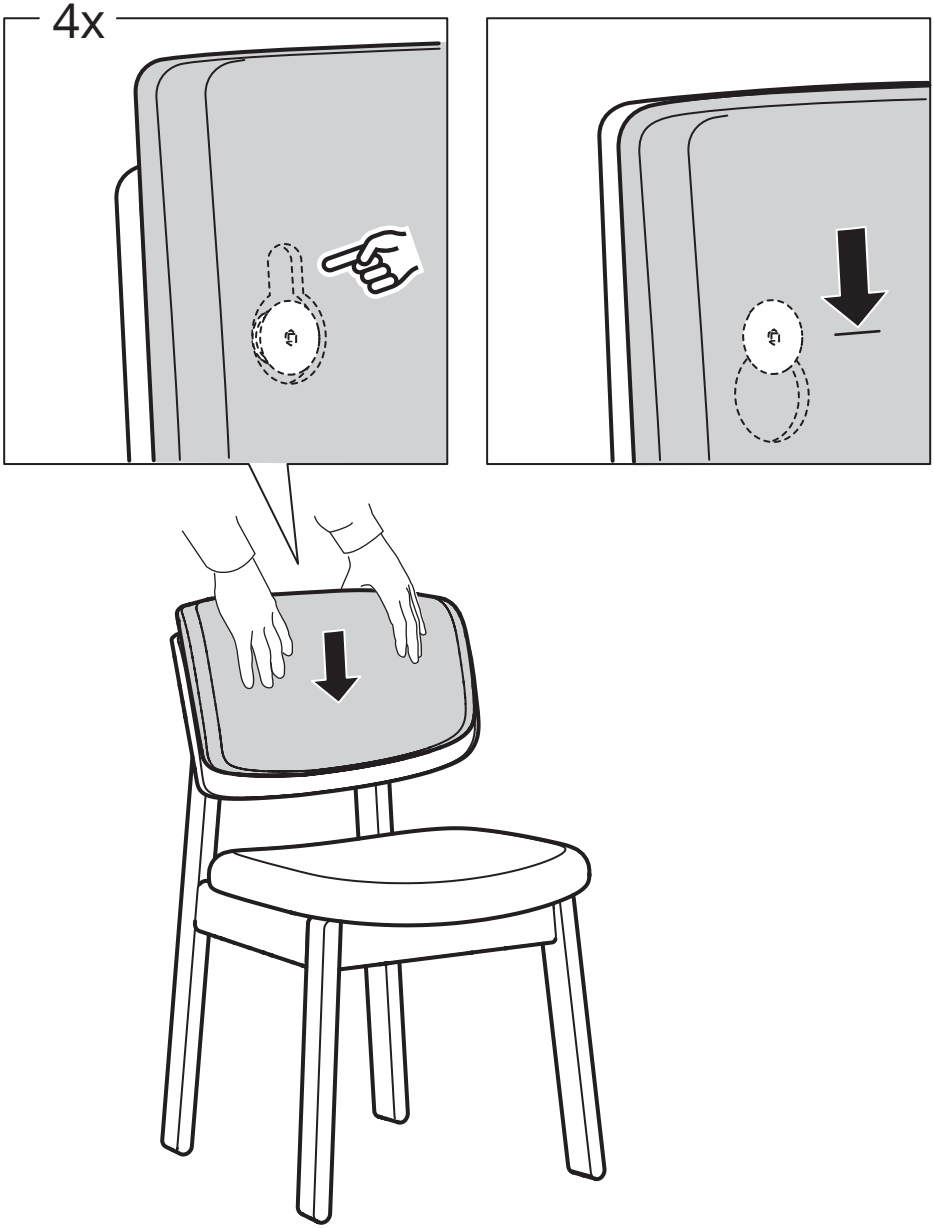

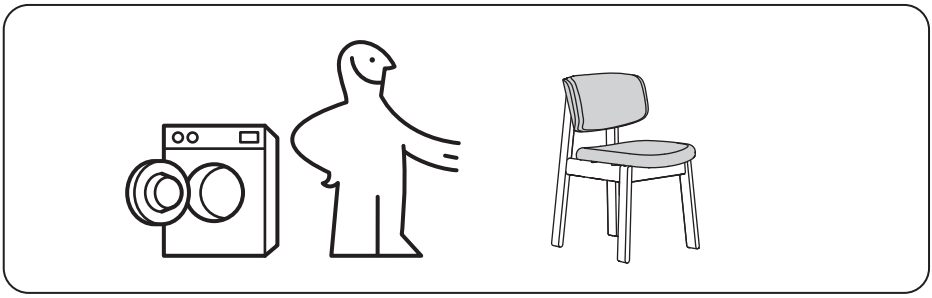

1



2

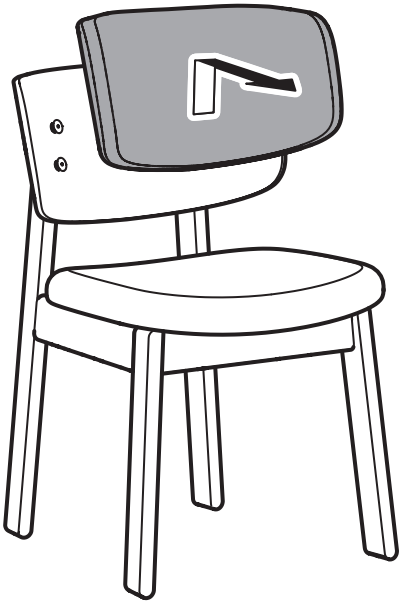

3

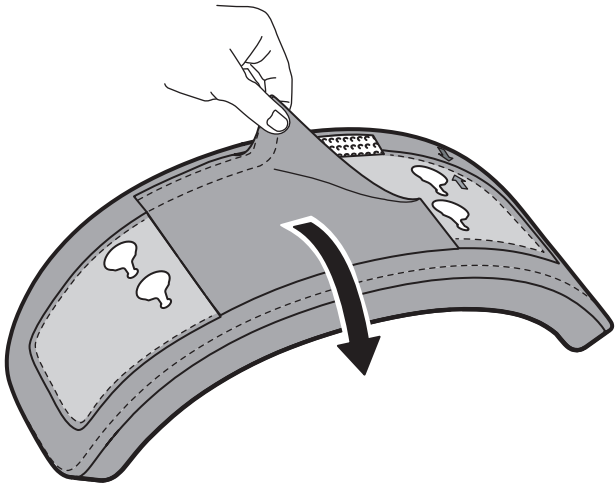

4

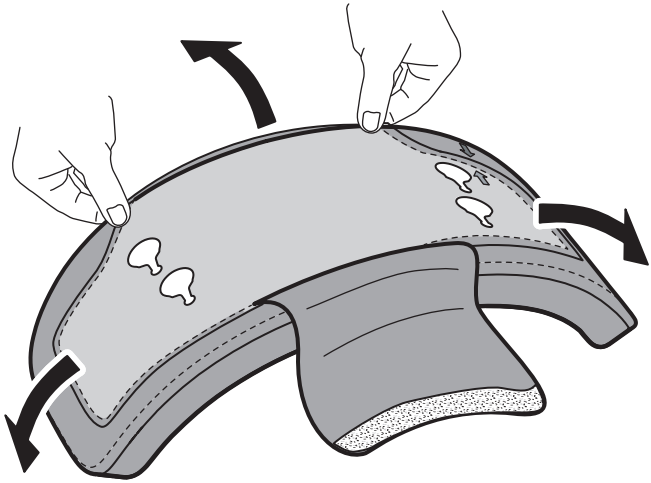

5

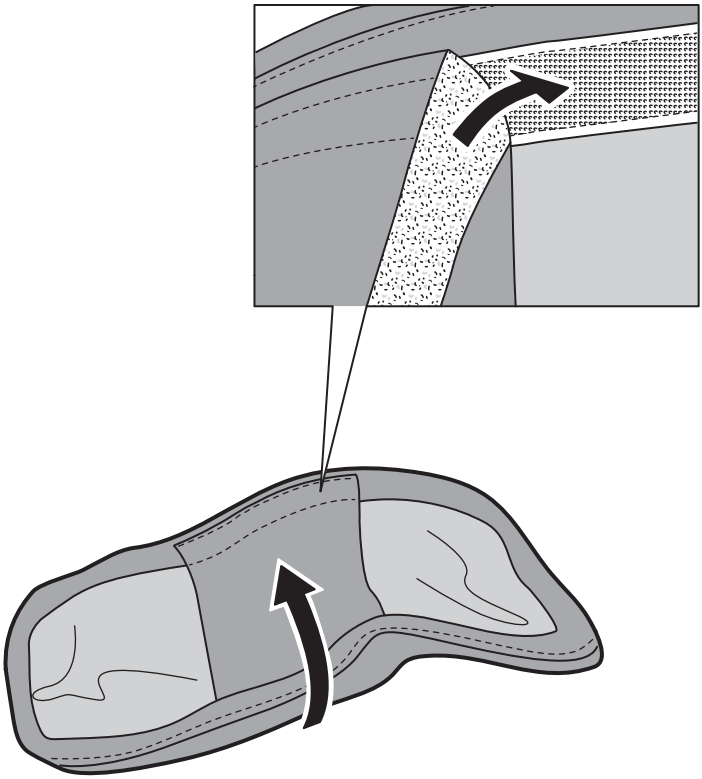

6

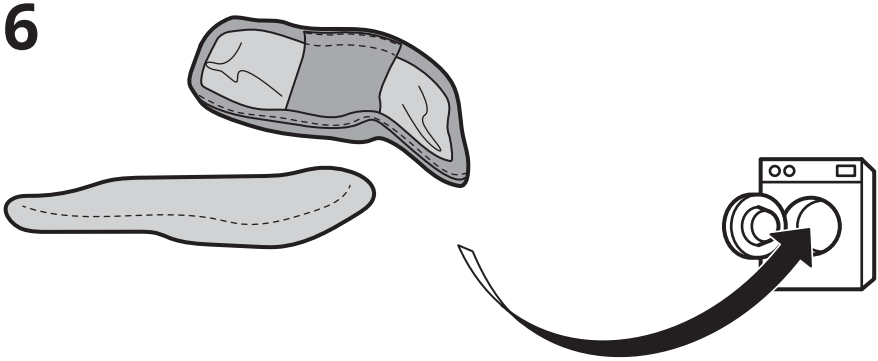

7

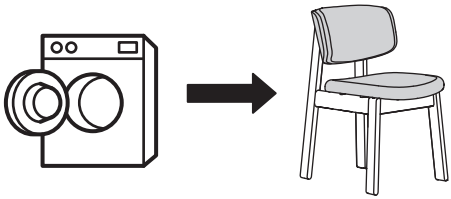

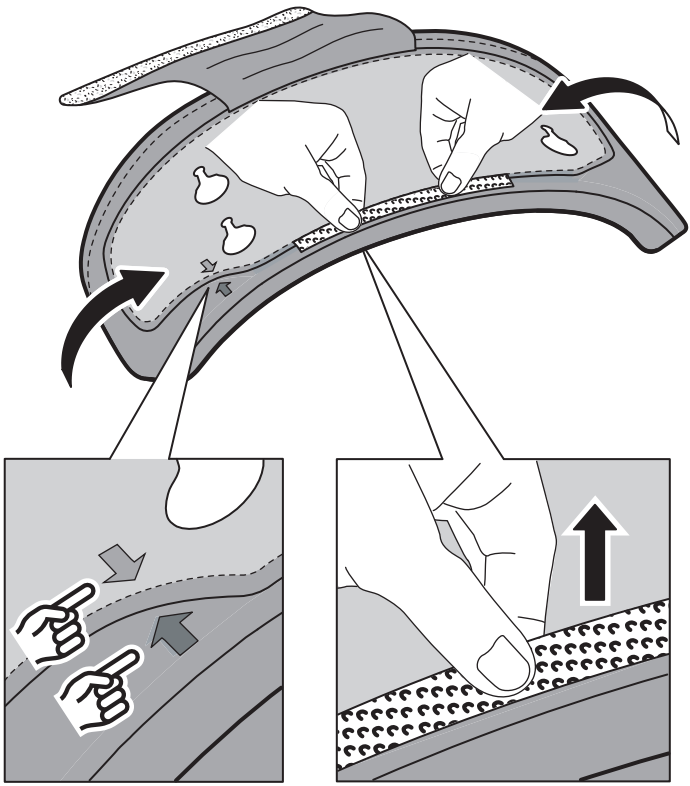

8

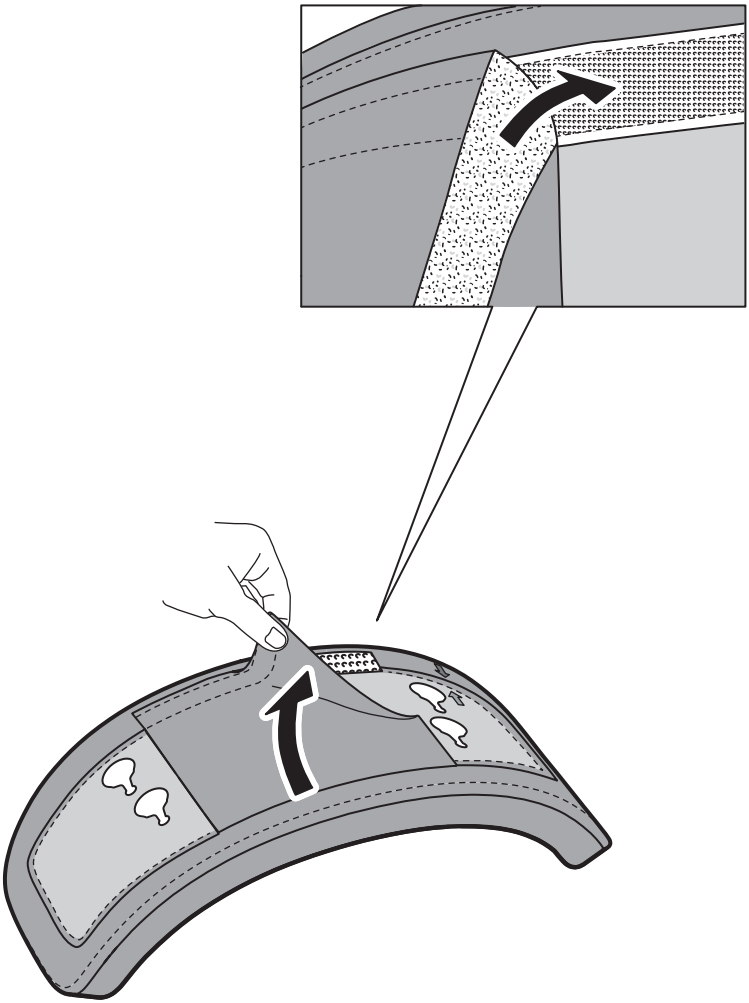

9

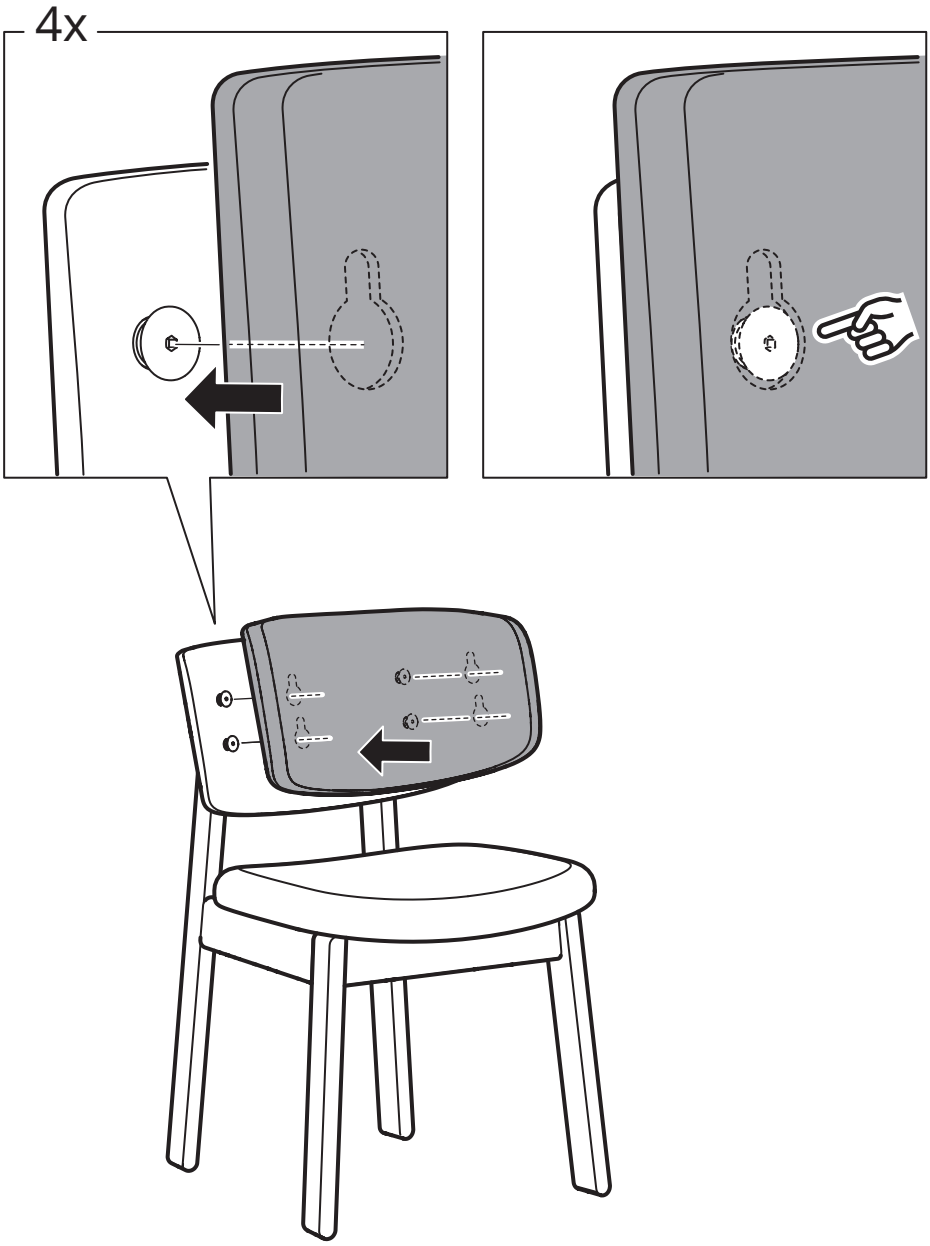

10

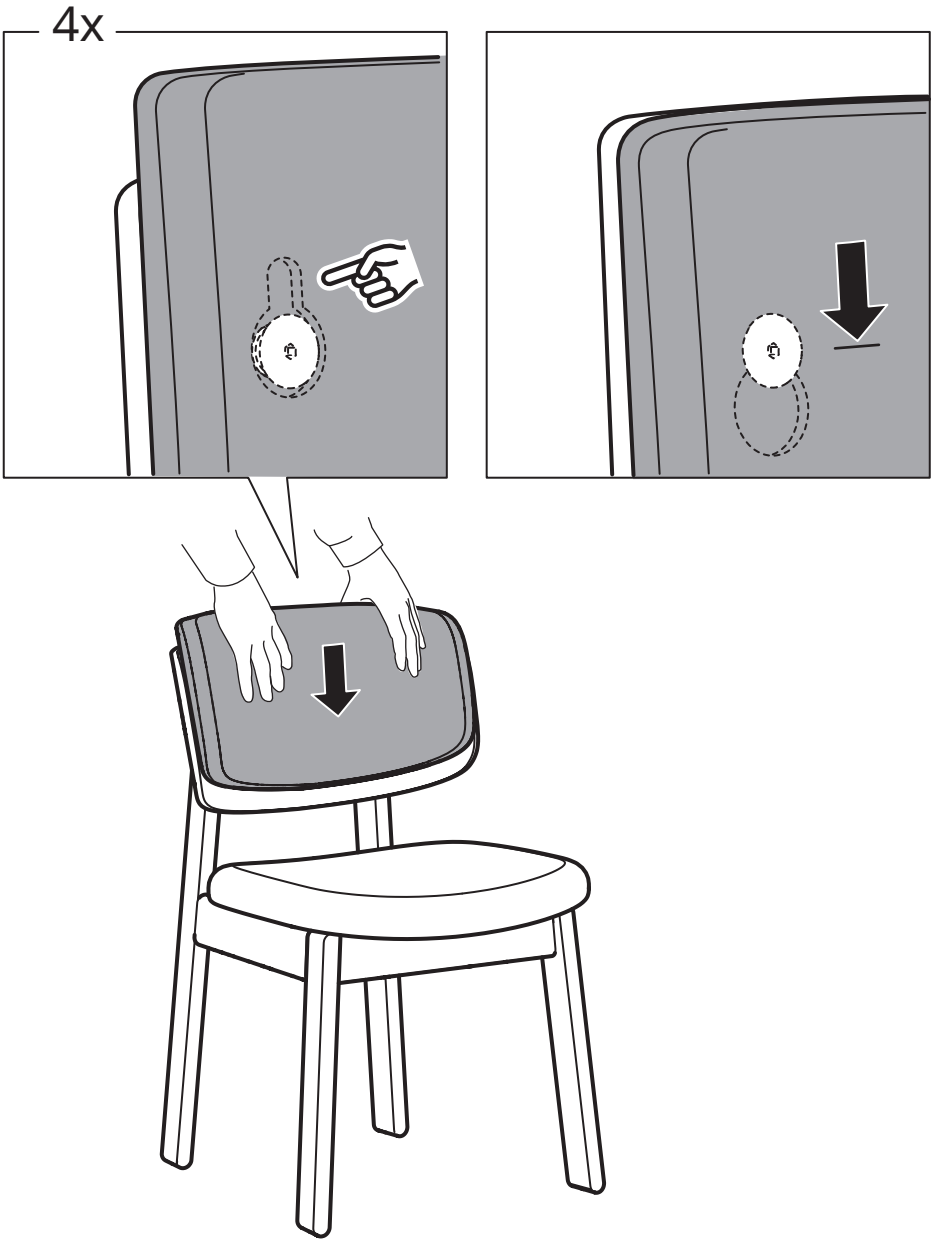

11

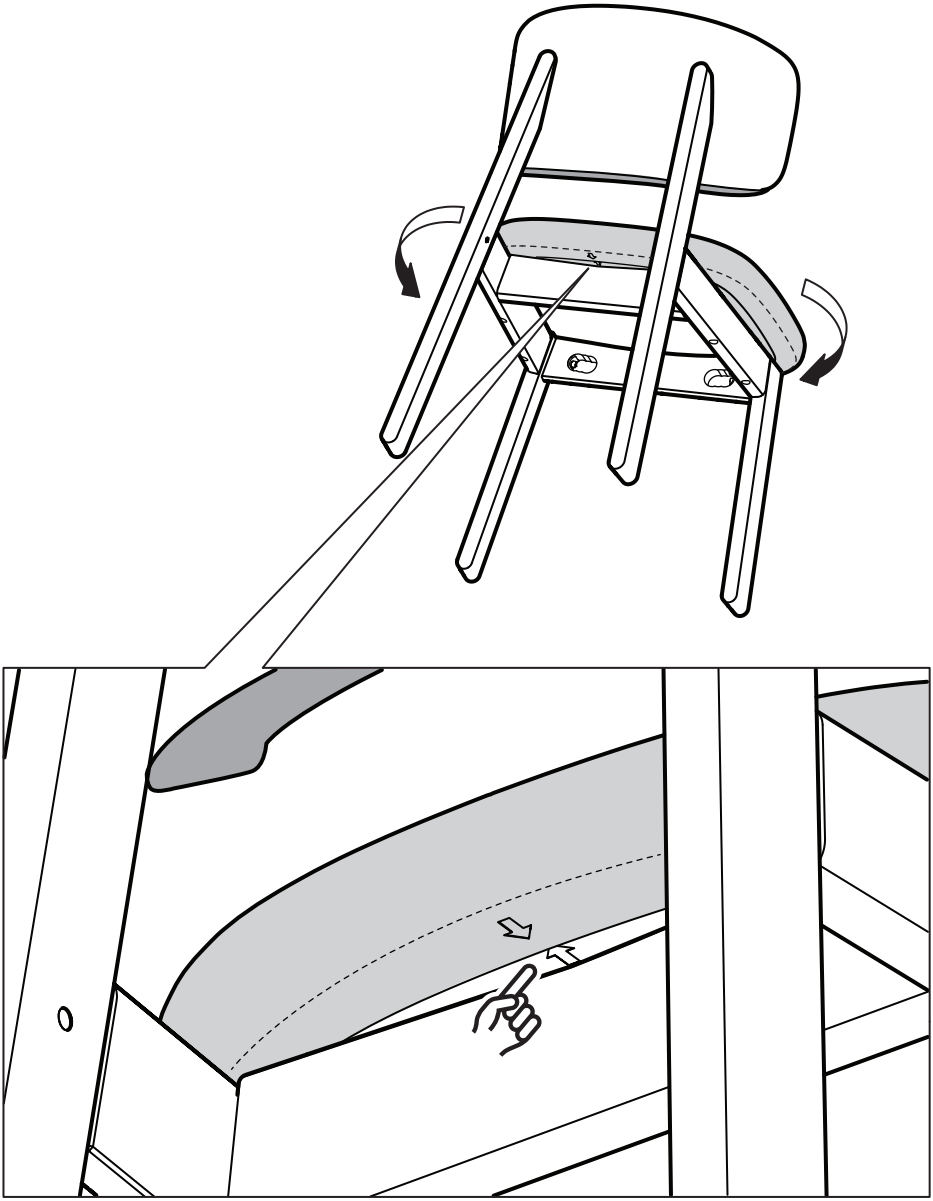

© Inter IKEA Systems B.V. 2025